TRANSNET

port terminals

DURBAN BBC TERMINALS

Document Title:
SCOPE OF WORK

Project Title:
Supply, Installation, and Commissioning of a Schneider Soft Starter for a 75 kW, 2-Pole Induction Motor at Maydon Wharf Agricultural Bulk Terminal (AgriPort)

REVISION 00: FOR QUOTATION

Table of Contents

Document Approval 1
1 Objective 1
2 Proposed Solution and Engineering Work to be Provided 2
3 Scope of Work Requirements 2
4 Additional Information Requirements 3
5 Quality of workmanship and materials 3
6 Safety 4
7 Operating Hours 4
8 Access Permit 4
9 Site Facilities 5
10 Pricing Considerations 5
11 Supervision: 5
12 Clearing of Site 6

1 Objective

As part of the ongoing efforts to enhance operational efficiency and safety at the Maydon Wharf Agricultural Bulk Terminal, a critical upgrade is required for the existing motor control system. Specifically, the installation of a Schneider soft starter for a 75 kW, 380V/660V, 2-pole, 134A induction motor is necessary to ensure smooth and controlled starting and stopping of the motor, thereby reducing the risk of electrical shocks, motor damage, and downtime. This project aims to provide a reliable and efficient soft starting solution that meets industry standards, while also ensuring compliance with local electrical safety regulations. The motor data sheet is provided in Figure 1.

DATA SHEET

Three Phase Induction Motor - Squirrel Cage

Customer	: TROJAN FANS (PTY LTD)
Product line	: W22 IE3 Premium Efficiency Three-Phase
Product code :	12912247

Frame	: 250S/M	Locked rotor time	: 26s (cold) 14s (hot)
Output	: 75 kW (100 HP)	Temperature rise	: 80 K
Poles	: 2	Duty cycle	: S1
Frequency	: 50 Hz	Ambient temperature	: -20°C to +40°C
Rated voltage	: 380/660 V	Altitude	: 1000 m.a.s.l.
Rated current	: 134/77.2 A	Protection degree	: IP66
L. R. Amperes	: 1059/609 A	Cooling method	: IC411 - TEFC
LRC	: 7.9	Mounting	: B3T
No load current	: 29.5/17.0 A	Rotation¹	: Both (CW and CCW)
Rated speed	: 2960 rpm	Noise level²	: 74.0 dB(A)
Slip	: 1.33 %	Starting method	: Direct On Line
Rated torque	: 24.7 kgfm	Approx. weight³	: 514 kg
Locked rotor torque	: 280 %		
Breakdown torque	: 290 %		
Insulation class	: H		
Service factor	: 1.00		
Moment of inertia (J)	: 0.5132 kgm²		
Design	: N		

Output	50%	75%	100%
Efficiency (%)	94.0	94.5	94.7
Power Factor	0.84	0.88	0.90

Foundation loads	
Max. traction	: 488 kgf
Max. compression	: 1002 kgf

Losses at normative operating points (speed;torque), in percentage of rated output power

P1 (0,9;1,0)	P2 (0,5;1,0)	P3 (0,25;1,0)	P4 (0,9;0,5)	P5 (0,5;0,5)	P6 (0,5;0,25)	P7 (0,25;0,25)
5.3	4.1	3.8	2.4	1.5	0.8	0.5

		Drive end	Non drive end
Bearing type	:	6314 C3	6314 C3
Sealing	:	W3 Seal labyrinth	W3 Seal labyrinth
Lubrication interval	:	5000 h	5000 h
Lubricant amount	:	27 g	27 g
Lubricant type	:	Mobil Polyrex EM	

Notes

This revision replaces and cancel the previous one, which must be eliminated.
(1) Looking the motor from the shaft end.
(2) Measured at 1m and with tolerance of +3dB(A).
(3) Approximate weight subject to changes after manufacturing process.
(4) At 100% of full load.

These are average values based on tests with sinusoidal power supply, subject to the tolerances stipulated in SANS 1804.

Rev.	Changes Summary	Performed	Checked	Date

Performed by			
Checked by		Page	Revision
Date	24/02/2025	1 / 5	

This document is exclusive property of WEG S/A. Reprinting is not allowed without written authorization of WEG S/A.
Subject to change without notice

Figure 1: 75kW Motor data sheet

2 Proposed Solution and Engineering Work to be Provided

The objective of this project is to provide a reliable and efficient soft starting solution for the 75 kW, 380V/660V, 2-pole, 134A induction motor. This will involve supplying and installing a soft starter system, including all necessary electrical components, to ensure smooth and controlled starting and stopping of the motor.

3 Scope of Work Requirements

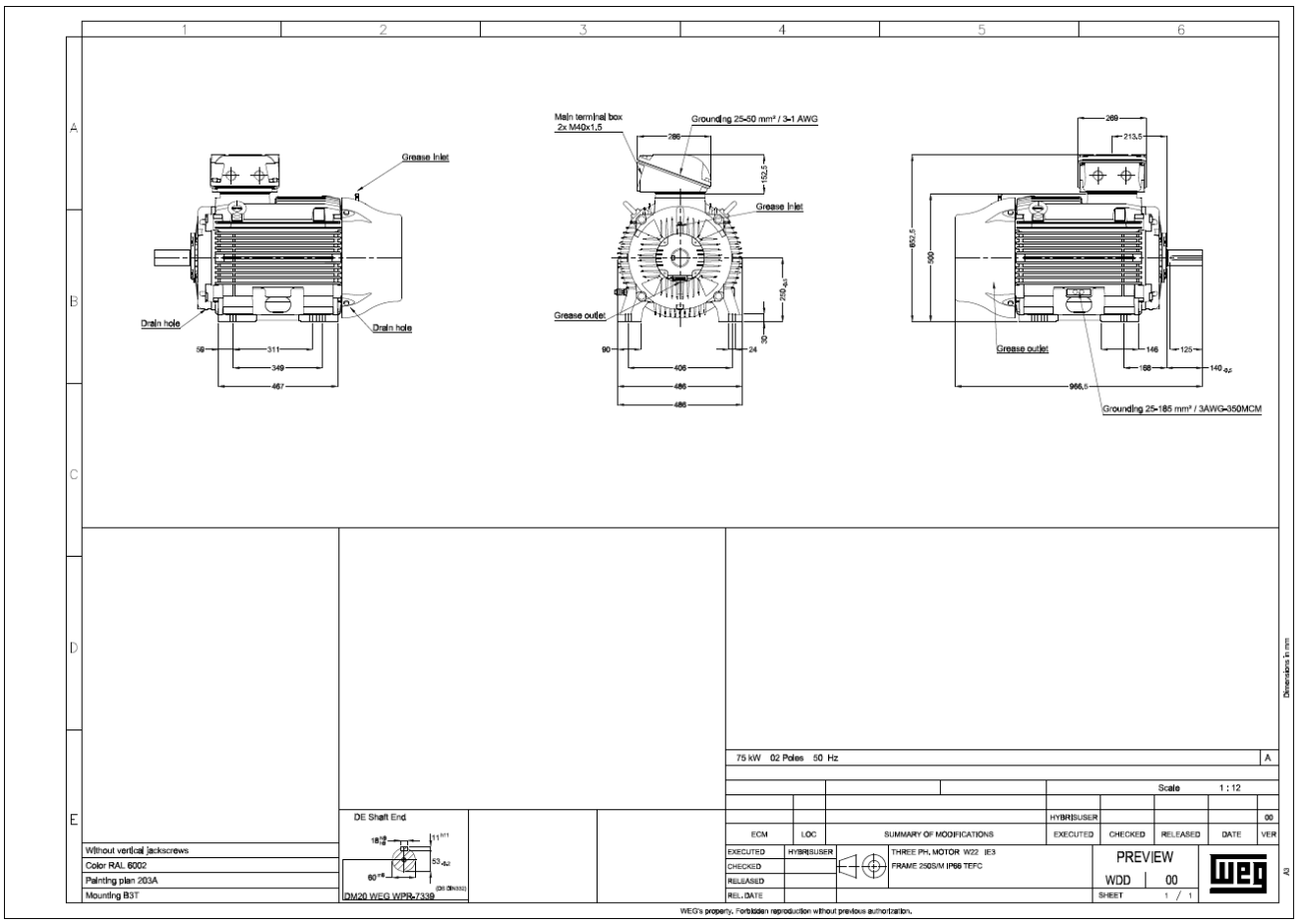

Figure 2: 75kW Motor

3.1 Engineering Scope of Works

a. The contractor is to conduct works as follows:

- Supply and install a new Schneider soft starter system for the 75-kW induction motor.
- The soft starter system shall meet the motor's specifications and ensure smooth and

controlled starting and stopping.

- The contractor shall ensure that they supply all electrical components, including:
  - Overload and short-circuit protection devices
  - Bypass contactor (if applicable)
  - Control wiring, terminals, and mounting accessories
  - IP-rated enclosure (if required)
- Ensure proper electrical connections between the motor, soft starter, and control panel.
- Configure the Schneider soft starter settings, including:
  - Ramp-up and ramp-down time
  - Current limit settings
  - Motor protection parameters
- Perform initial test runs under no-load and load conditions.
- Verify:
  - Soft start and stop functionality
  - Starting current and acceleration profile
  - Thermal performance and protection settings
- Conduct a final performance evaluation to ensure optimal operation.

4 Additional Information Requirements

- All bidders must attend a compulsory briefing session and bidders who did not attend a brief session will be disqualified.
- All measurements listed are only a guide; the contractor is responsible for his/her own
- measurements.
- All rubble and debris must be cleared from site and site to be left clean
- All material to be used shall be SABS approved. Only materials of first class shall be utilized and all materials shall be subject to approval by the Technical Manager.

5 Quality of workmanship and materials

The quality of workmanship and materials supplied by the supplier must be of the same standard as that of the original installation or improved as per approved latest technology. The awarded Service provider is to adhere to the below Employer Specifications where applicable.

- EEAM-Q-008 - Corrosion protection
- EEAM-Q-009 - Quality Management

- EEAM-Q-013 - Commissioning and hand over Rev 1

6 Safety

The following safety procedures together with the terminal standard operating conditions are to be always adhered to. No exceptions will be tolerated.

6.1 All personnel reporting to terminal must come in full Personal Protective Equipment gear (Safety vest, hard hat, and safety shoes)

6.2 All Transnet regulations shall be abided by at all times.

6.3 Vehicles used are to be fitted with a rotating flashing light and proper company signage when accessing the terminal.

6.4 Only certified or competent technical personnel are required to operate electrical machinery.

6.5 All TPT owned equipment or property needs to be signed off by TPT representative before exiting the terminal.

6.6 Terminal provides mess and ablution facilities and must always be kept clean.

6.7 No discipline irregularities will be condoned. Offenders will be requested to leave the terminal immediately pending a full investigation.

6.8 Notification of arrival will be mandatory.

7 Operating Hours

The Durban BBC Terminals operate 24 hours a day. The infrastructure maintenance team mainly works a day shift (06h45 – 15h15 weekdays) and all work should be done during this period. Any work requiring irregular hours should be communicated timeously to a TPT representative and required approvals obtained.

8 Access Permit

8.1 Site meeting:

For the site meeting, all suppliers are required to bring with them the following in order to apply for the required permit:

- Hardcopy of the RFQ.
- Proof of identification for all employees attending.
- Letter from the relevant company stating the names and surnames of the employees

requesting access and reason for access.

- Minimum PPE. Safety vest, hard hat, and safety shoes.
- Suppliers are advised to bring any/all required measuring tools for proper pricing.

8.2 Conducting the Work

In order to acquire access permits for conducting work, external contractors will need to attend safety induction (valid for a year). Safety would also advise the need for submitting a safety file. Thereafter application for permits from security can be submitted. For vehicle access, all vehicles are required to have a company sign and a revolving light and access will be obtained at the security office.

9 Site Facilities

No provisions have been made for the site facilities. Security of the Service Provider's tools, material and machinery remain his responsibility. It is the responsibility of the Service Provider to provide his own machinery, equipment, office facilities etc. wherever necessary and/or required for the completion of the works.

10 Pricing Considerations

<u>The Service Provider must include the following costs in their quotation:</u>

10.1 All costs related to preparing and submitting the Safety File for approval by the safety department.

10.2 Including all costs associated with equipment hiring, machinery, and tools required for the completion of the project.

10.3 Incorporating costs related to hiring any necessary facilities and other charged obligations required for the project.

10.4 Covering all expenses related to trench digging, replacement parts, installations, re-fixing, temporary storage of tools, supply and delivery of materials, formwork, equipment, and facilities as specified in the scope of work.

10.5 Including costs related to any professional services required to support the project.

11 Supervision:

The Contractor or a responsible person authorized to act on behalf of the Contractor shall maintain constant on-site supervision to receive instructions from the Project Leader and

ensure the proper execution of the project.

12 Clearing of Site

The contractor must observe all laws and ordinances governing the disposal of construction waste. The contractor will be required to furnish a plan for disposition of debris. The contractor is hereby notified the burning on the site is strictly prohibited. The work will not be deemed to be complete unless the site is cleared to the satisfaction of the Project Leader. Burying discarded material will not be tolerated. No combustible material shall be permitted to accumulate on the site. If in the opinion of a safety official that it is becoming a fire hazard; he is empowered to stop all operation to have the hazard removed promptly. All relevant legislation pertaining "WASTE" must be adhered to. Skip to be provided by contractor.