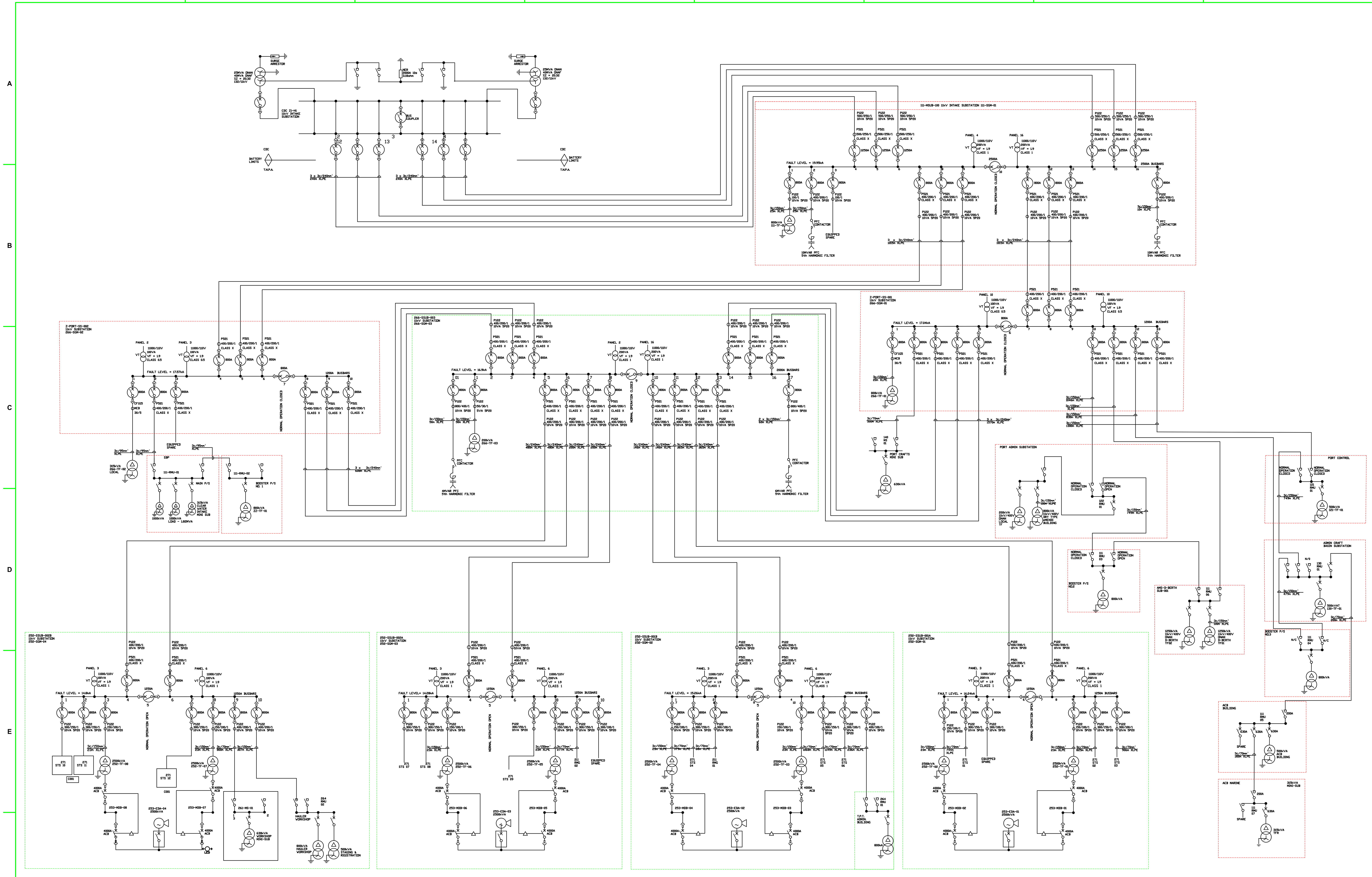

DRAWING NO.	REFERENCE
.	.

REFERENCE DRAWINGS

NO.	DESCRIPTION	BY	CHKD	APPD	DATE

REVISIONS

This Document including all design and information therein is Confidential Intellectual Property of Transnet.
Copyright and all other rights are reserved by Transnet. This Document may only be used for its intended purpose.

CONTRACTOR / CONSULTANT

TITLE	NAME	SIGN	DATE

OPERATING DIVISIONS

TITLE	NAME	SIGN	DATE

TNPA

TITLE	NAME	SIGN	DATE
DRAWN			
CHECKED			
DESIGNED			
CHECKED			

PR.ENG. / PR.TECH./PR. ARCH

NAME	DATE
SIGNATURE	
REG. NUMBER	
SCALE : AS SHOWN.	A0

Transnet National Ports Authority

TRANSNET

PORT OF NGQURA

PORT OF NGQURA
ELECTRICAL SUPPLY & RETICULATION
OVERALL 11kV RETICULATION & PROTECTION
SINGLE LINE DIAGRAM

PROJECT NUMBER	OD	FBS	DIS	TYPE	DRAWING NO.	SHEET	REV	ID
H500204	1	111	E	SL	0013	01	01	TD