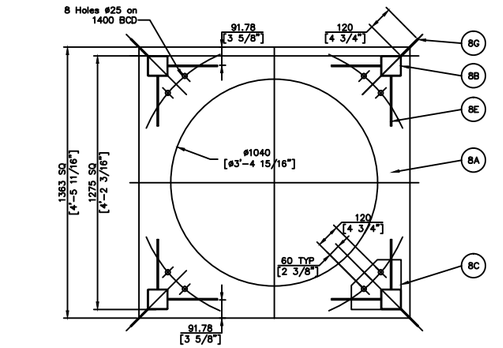

SECTION A-A

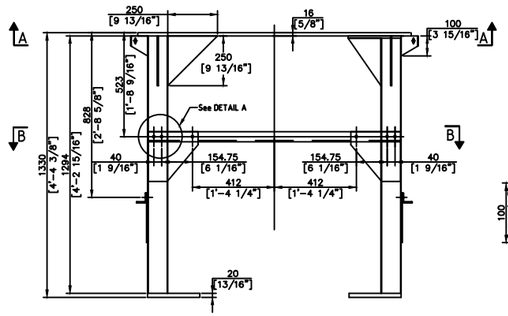

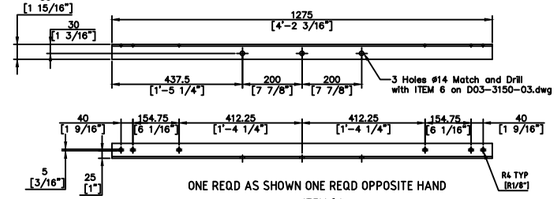

ITEM 8J
Scale 1:20

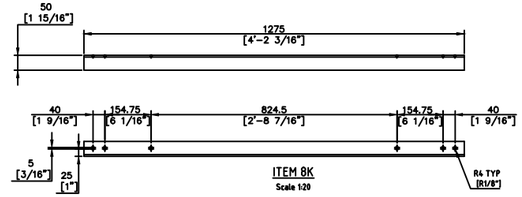

ITEM 8K
Scale 1:20

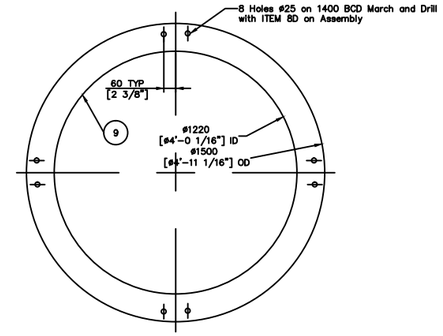

ITEM 9

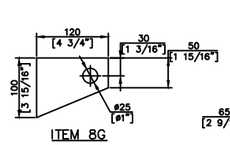

ITEM 8G
Scale 1:10

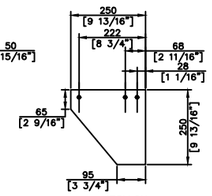

ITEM 8H
Scale 1:20

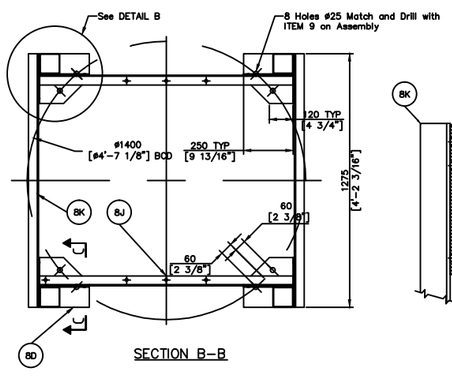

SECTION B-B

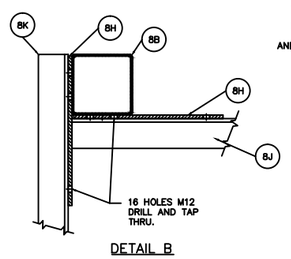

DETAIL B
Scale 1:10

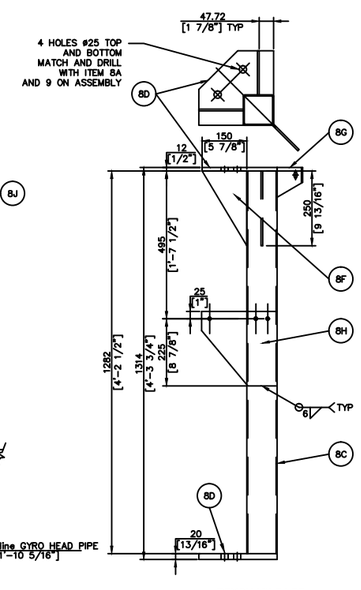

REMOVABLE LEG
ITEM 8C
Scale 1:20

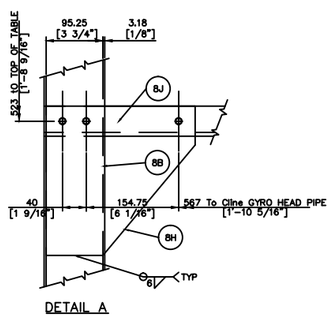

DETAIL A
Scale 1:10

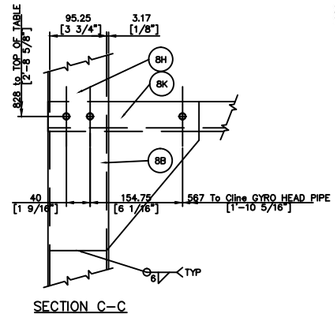

SECTION C-C
Scale 1:10

DESIGN FROZEN

S. GYABRONKA P.Eng. ELMEC ENGINEERING LIMITED SIGNATURE ON FILE

ITEM	QTY	MATERIAL	SIZE/REF
9	1	Guide Pl 40 (or 2 Pl 20 Rings welded together)	ø1500 ss 304
8K	2	Stiffener L 50 x 50 x 6	1275 lg
8J	2	Stiffener L 50 x 50 x 6	1275 lg
8H	6	Pad Pl 6 x 250	250 lg
8G	4	Lifting Lug Pl 6 x 100	120 lg
8F	2	Gusset Pl 6 x 150	250 lg
8E	6	Gusset Pl 6 x 250	250 lg
8D	5	Flange Pl 12 x 250	250 lg
8C	1	Removable Leg HSS 100 x 100 x 6	1290 lg
8B	3	Leg HSS 100 x 100 x 6	1302 lg
8A	1	Top Plate Pl 16 x 1363	1363 lg

REVISIONS	MADE BY	DATE	REV	ISSUES	DATE	REFERENCE DWGS
–	–	–	–	For Comments/As Built	Feb 27/03	–

ELMEC ENGINEERING LIMITED
N.VANCOUVER,B.C.

PORTNET
RICHARDS BAY-DRY BULK JETTY SHIPLOADER
SHIPLOADER 2

1000 T.P.H SHIPLOADER
GYRO HEAD
FRAME ARRANGEMENT AND DETAIL

DRN JCG
CHK
ENGR
JOB D-3220

DWG NO. D03-3150-04
REV -
SCALE 1:30
DATE Feb 27/04

FILE NAME: D04-3090
CAD# D03-3150-04
LEO REF. # 099-3523
FILE PATH: C:\Projects By Customer\Shiploader\bulk\D03-3150 (GYRONEAU)\D03-3150-04 (FRAME ARRANGEMENT AND DETAILS).dwg

A B C D E F